AD202-Compatible High-Precision Analog Voltage Signal Isolation Amplifier

5 kHz High-Bandwidth ±5 V Signal Isolation Amplifier: ISOEC 202 Series

Product Features

●High bandwidth: 5 kHz (-3 dB), pin-to-pin compatible with the AD202 module
●Available in two package options: standard SIP-12 pin and PCB adapter, both compatible with the AD202
●Accuracy class: Class 0.1, Class 0.2; nonlinearity <0.05% across the full range
●2,500 Vrms isolation between signal input and output
●Power Supply: 15 VDC
●Built-in isolated power supply provides isolated power distribution for functional expansion: ±8 V / ±10 mA
●No external potentiometer required for calibration; no zero-point or gain adjustment needed
●Choice of DIN 35 rail mounting or module soldering onto a PCB
●Industrial-grade operating environment with a wide temperature range: -40 to +85 °C

Typical Applications

●Power supply configuration for circuits such as preamplifiers and resistance bridges to facilitate signal acquisition
●Analog signal ground interference suppression, loop isolation, and data acquisition
●Stepper motor operation control
●High-speed data acquisition system for sensor voltage signals
●Analog bidirectional voltage signal waveform recorder
●Isolation of multiple bidirectional voltage signal inputs for PLC/DCS systems
●Applications in vibration analysis and strain gauge signal conditioning
●Monitoring of power lines and transient voltage signals
●Circuit isolation and interference suppression at the input terminals of multi-channel data acquisition systems

Overview

SunYuan ISOEC 202 is a high-speed-input isolation amplifier designed to isolate and amplify wideband analog voltage signals. It adopts a high-/low-voltage isolation capacitive differential transmission scheme, using capacitive electric-field coupling instead of electromagnetic-field coupling. This design eliminates magnetic saturation, hysteresis distortion, and electromagnetic radiation interference, making it ideal for wideband signal isolation and amplification over a broad frequency range from DC to 5 kHz. While delivering wideband dynamic performance, it also preserves critical DC performance specifications.Designed with flexibility and ease of use in mind, this device is suitable for a wide range of applications requiring high-speed analog signal measurement under high common-mode voltage (CMV) conditions.

The ISOEC 202 series supports an input and output voltage range of ±5 V and a gain setting range of 1–100 V/V. It features a flexible input stage and a buffered output stage. An independent operational amplifier is integrated at the input to provide input buffering, amplification, and signal conditioning. The buffered output stage is capable of driving low-impedance loads.The device provides complete electrical isolation between the input and output, along with an isolated power supply for the input side. It is a fully integrated solution powered by a single +15 V DC supply from the output side. The built-in integrated isolated DC-DC converter eliminates the need for an additional external isolated DC-DC converter, helping designers reduce peripheral circuitry, simplify overall system design, and lower component costs. The isolated input side also provides regulated ±8 V DC power (up to ±10 mA) to power external amplifiers and signal-conditioning devices on the isolated side. This power can also be used directly to excite sensors or transmitters in the field.

The ISOEC 202 series is available in four package options to meet different installation requirements: 1.ISOEC 202Y: Uses a PCB adapter with a pin-to-pin compatible pinout matching the widely used AD202KY package. 2.ISOEC 202N: Uses a PCB adapter with a pin-to-pin compatible pinout matching the widely used AD202KN package. 3.ISOEC

202S: Features a low-cost, compact, standard SIP-12-pin flame-retardant package. 4.DIN ISOEC 202: Features a DIN-rail-mounted design with terminal wiring for convenient installation. All four versions offer identical performance, providing 2500 Vrms high-voltage electrical isolation between input and output. They combine high accuracy, wide bandwidth, strong magnetic interference immunity, and a compact form factor, making them ideal for interfacing with analog signals from specialized sensors and transmitters.The series effectively addresses common limitations of magnetically coupled isolation circuits in complex industrial electromagnetic environments, including susceptibility to magnetic field interference, low-frequency signal distortion, and bulky designs. It is widely applicable to high-precision, wideband analog signal isolation and acquisition in power monitoring, industrial automation, rail transit, and precision instrumentation.

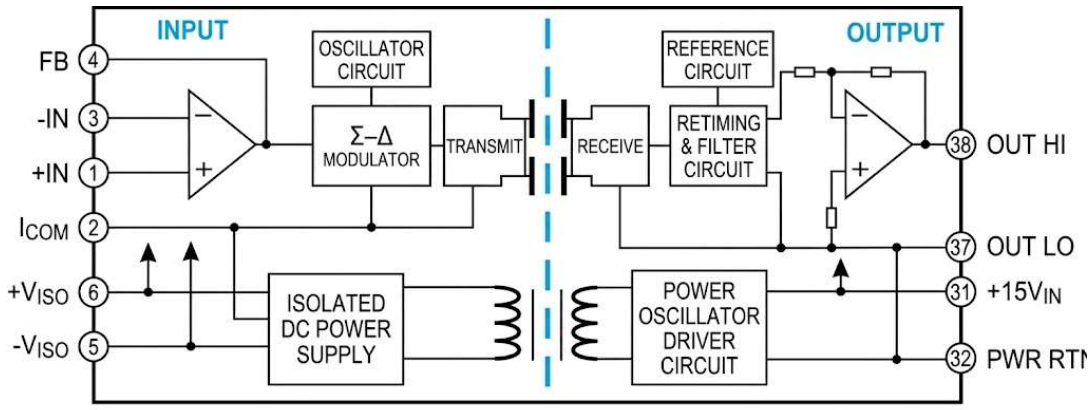

FIG. 1 ISOEC202Y BLOCK SCHEMATIC

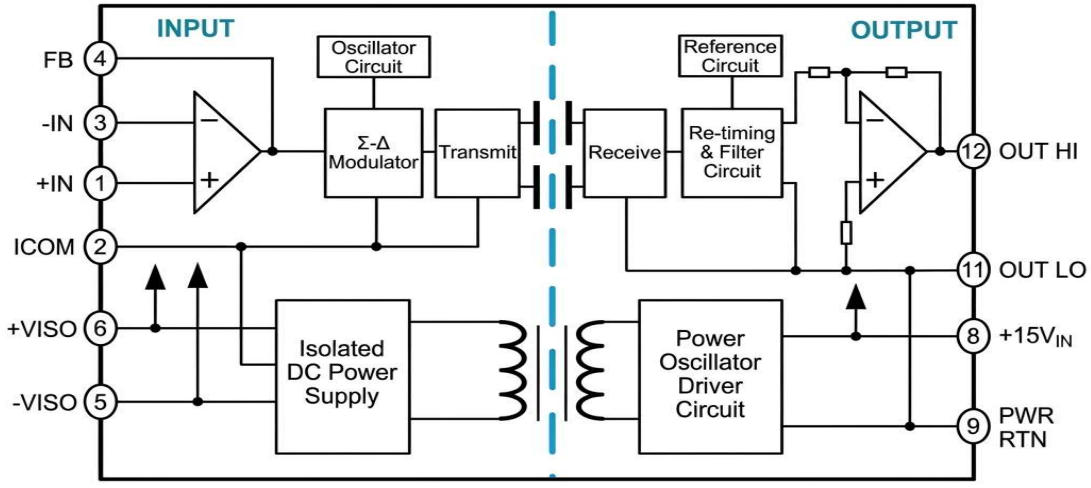

Fig 2. ISOEC202S Schematic Block Diagram

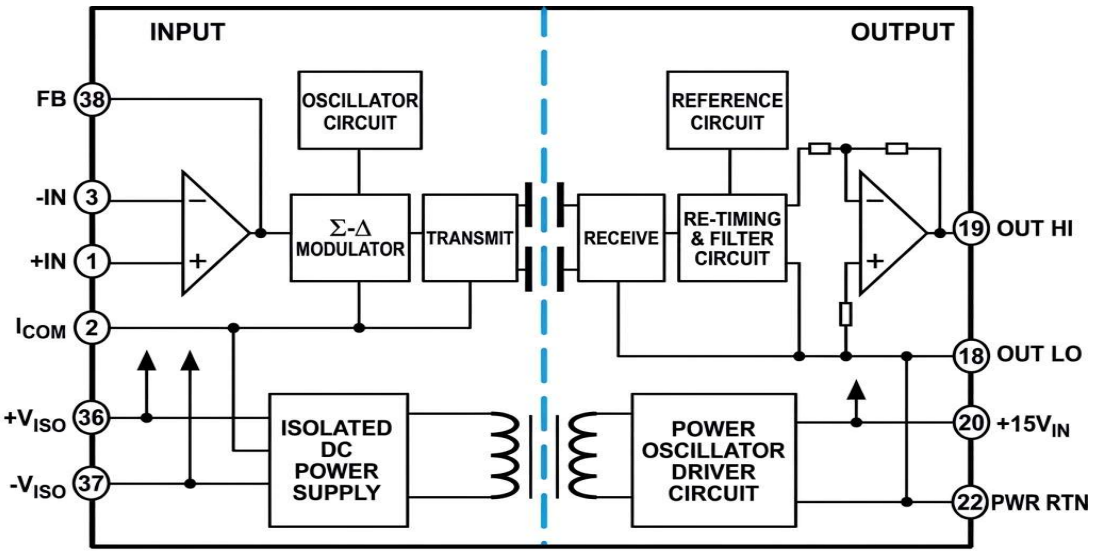

Fig 3. ISOEC202N Schematic Block Diagram

Maximum Rated Value

（Operating the product at its maximum rated values for extended periods will shorten its service life; exceeding these values may result in irreparable damage.）

Continuous Isolation Voltage （Maximum Continuous Isolation Voltage Between Input and Output Terminals）	2500Vrms
PWR（Maximum Auxiliary Power Supply Input Voltage）	16.5VDC
Lead Temperature （Maximum soldering temperature and duration for pins: <10 seconds ）	+300℃
Output Voltage Load （）MinMinimum load when outputting a voltage signal）	2KΩ

Selection Guide

Model No.	Packaging	Selection Recommendations
ISOEC 202Y	PCB Adapter Compatible with AD202KY (SIP-38-Pin))	PCB Mounting with Pin-to-Pin Compatibility with AD202KY
ISOEC 202N	PCB Adapter Compatible with AD202KN (DIP-38-Pin)	PCB Mounting with Pin-to-Pin Compatibility with AD202KN
ISOEC 202S	Compact SIP-12-Pin Package	For Use in New PCB Designs
DIN ISOEC 202	Standard DIN35 Rail Mounting	No PCB Soldering Required; DIN-Rail Mounting in Control Cabinets

Technical Specifications

（Test Conditions: 25°C, 15 VDC power supply, 2 kΩ output load, unless otherwise noted）

Parameter Name	Test Conditions	Mini	Typical Value	Max	Unit
Isolation Voltage	AC,60Hz,1min		2500		Vrms
Gain		1		100	V/V
Gain Error			2		mV/V
Gain Temperature Drift			50		ppm/℃

Nonlinearity				±0.025	±0.05	%FSR
Signal Input		voltage	-5		5	V
Input Offset Voltage				±0.2	±3	mV
Input Impedance				10^12		Ω
Power Supply Output	Voltage			±8		V
	Current			±10		mA
	Ripple			±50		mV
	Accuracy			±2		%
Signal Output		voltage	-5		5	V
Load Capacity		Vout=±5V		2		kΩ
Full Signal Bandwidth		-3dB		5		KHz
Common-Mode Rejection					105	dB
Signal Output Ripple		No filtering		5	20	mVRMS
Signal Voltage Temperature Drift				0.1	0.5	mV/℃
Auxiliary Power Supply	Voltage	User-defined	14.25	15	16.5	VDC
	Current	Full load		50		mA
Operating Temperature			-40		85	℃
Storage Temperature			-45		105	℃

DIN ISOEC 202 Guide Rail Product Dimensions

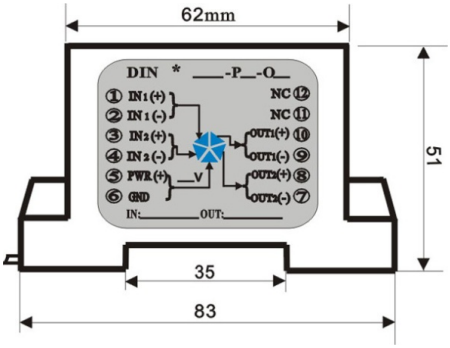

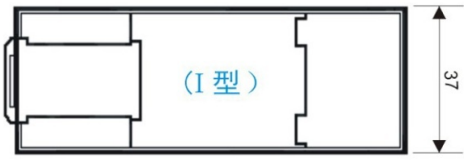

ISOEC 202S Compact SIP-12-Pin Package and PCB Layout Reference Dimensions

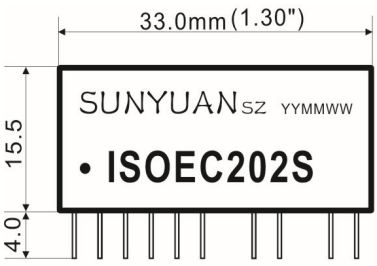

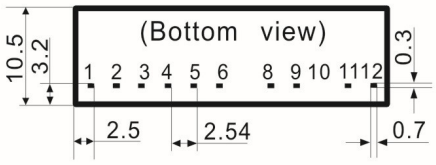

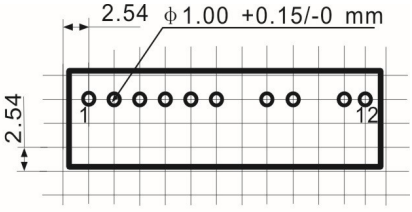

ISOEC202S PCB布板参考

PCB Adapter: Pin-to-Pin Compatible with AD202KY/AD202KN Form Factor and PCB Layout Reference Dimensions

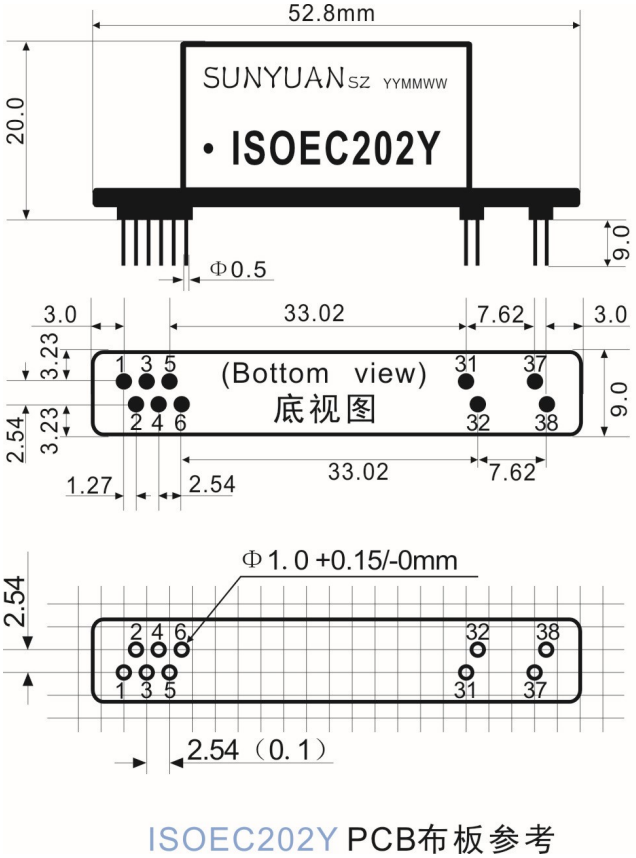

ISOEC202Y PCB布板参考

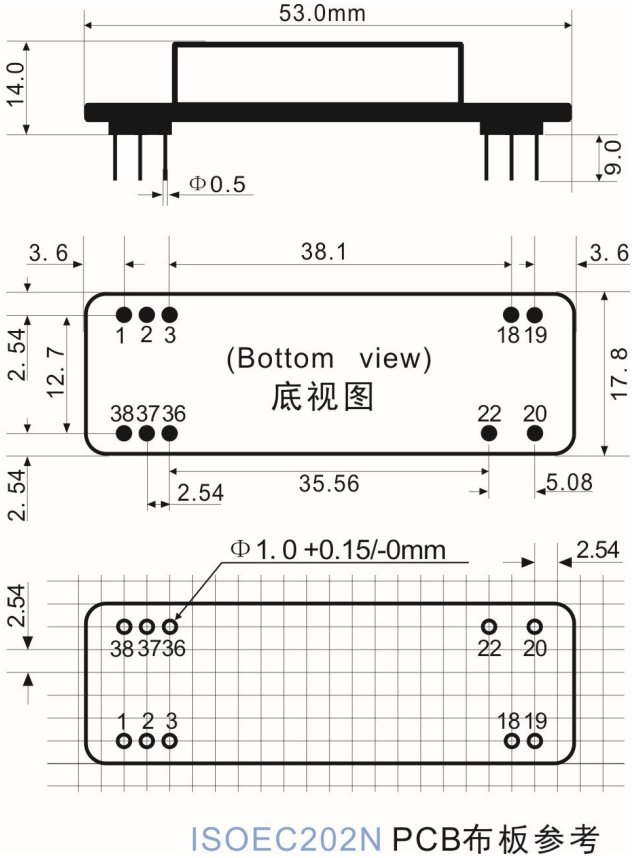

ISOEC202N PCB布板参考

ISOEC 202Y Pin Function Description

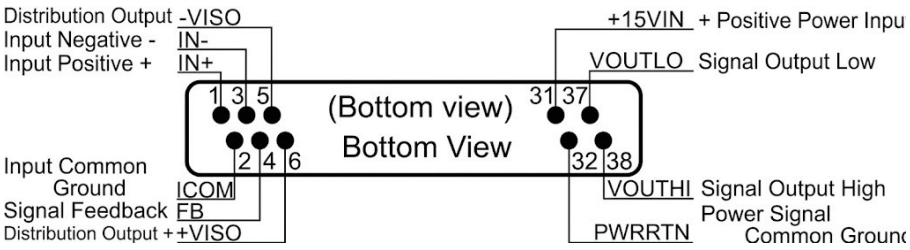



No.	Symbol	Function	No.	Symbol	Function
1	IN+	Signal Input (Positive)	6	+VISO	Isolated Power Distribution + 8V Positive Voltage Output
2	ICOM	Signal Input (Common Ground)	31	+15VIN	+15V Positive Power Input
3	IN-	Signal Input (Negative)	32	PWR RTN	Power Signal Common Ground
4	FB	Signal Feedback Terminal	37	VOUT LO	Signal Output Low (Ground)
5	-VISO	Isolated Power Supply – -8V Negative Voltage Output	38	VOUT HI	Signal Output High (Positive)

ISOEC 202N Pin Function Description

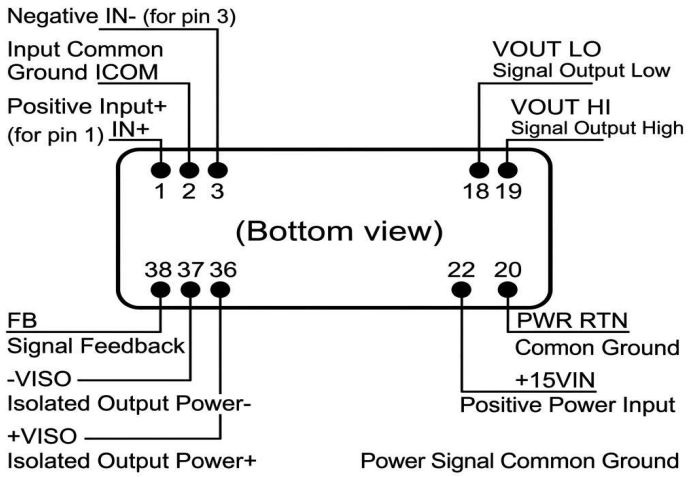



No.	Symbol	Function	No.	Symbol	Function
1	IN+	Signal Input Positive Terminal	20	+15VIN	+15V Positive Power Supply Input
2	ICOM	Signal Input Common Ground Terminal	22	PWR RTN	Power Signal Common Ground
3	IN-	Signal Input Negative Terminal	36	+VISO	Isolated +8V Positive Voltage Output
18	VOUT LO	Signal Output Low (Ground)	37	-VISO	Isolated -8V Negative Voltage Output
19	VOUT HI	Signal Output High (Positive)	38	FB	Signal Feedback Terminal

ISOEC 202S Pin Function Description

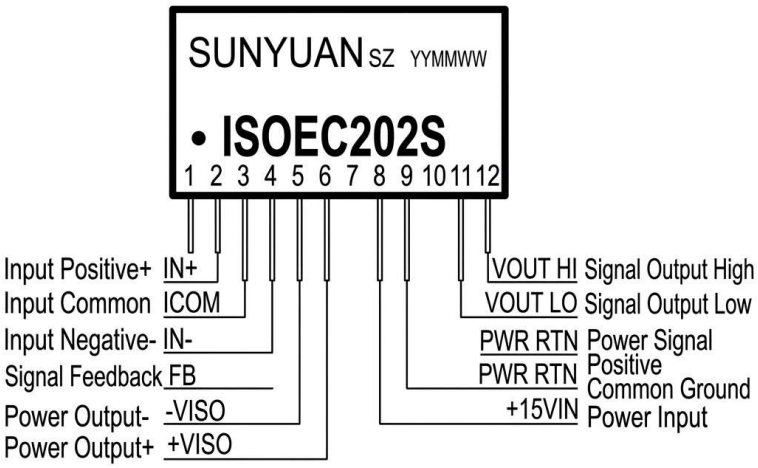



No.	Symbol	Function	No.	Symbol	Function
1	IN+	Signal Input (Positive)	7	NC	Unused pin
2	ICOM	Signal Input (Common Ground)	8	+15VIN	+15V positive power supply input
3	IN-	Signal Input (Negative)	9	PWR RTN	Signal power common ground
4	FB	Signal Feedback Terminal	10	NC	Unused pin
5	-VISO	Isolated Power Supply: -8V Negative Voltage Output	11	VOUT LO	Signal output low (ground)
6	+VISO	Isolated Power Supply: +8V	12	VOUT HI	Signal output positive

		Positive Voltage Output			

Pin Function Description for DIN ISOEC 202 Rail-Mounted Signal Isolators

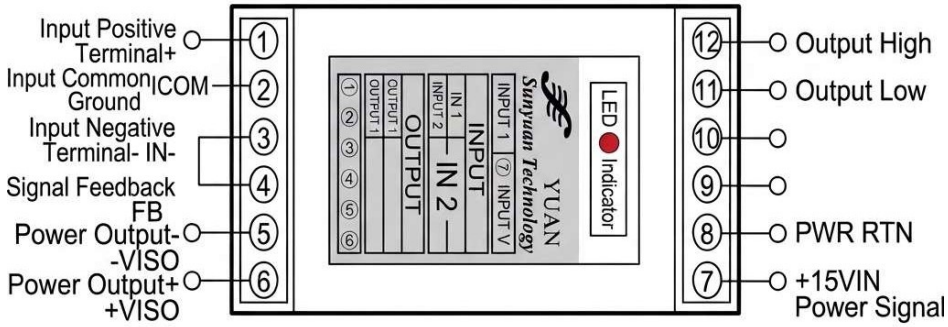

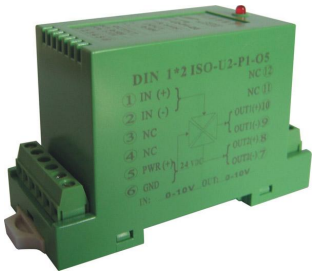

No.	Symbol	Function	No.	Symbol	Function
1	IN+	Signal Input (Positive)	7	+15VIN	+15V Positive Power Supply Input
2	ICOM	Signal Input (Common Ground)	8	PWR RTN	Common Ground for Positive and Negative Power Supplies
3	IN-	Signal Input (Negative)	9	NC	Unused pin
4	FB	Signal Feedback Terminal	10	NC	Unused pin
5	-VISO	Isolated Power Supply: -8V Negative Voltage Output	11	VOUT LO	Low Signal Output (Ground)
6	+VISO	Isolated Power Supply: +8V Positive Voltage Output	12	VOUT HI	High Signal Output (Positive)

Typical Applications

Figure 4 shows the basic gain configuration of the ISOEC 202Y. The input amplifier gain is set to G = 1, meaning that when the input signal is ±5 V, the output signal is also ±5 V. No amplification is applied to the input signal, and the device provides signal isolation with a basic 1:1 input-to-output ratio. Figure 5 illustrates the gain configuration of the ISOEC 202Y when the input signal is relatively small and amplification is required (G > 1). In this case, external gain-setting feedback resistors should be connected as shown in the diagram to amplify the input signal. To ensure accuracy, high-precision metal film resistors with a temperature coefficient of 25 ppm/°C are recommended. The resistor values can be calculated based on the desired output voltage and corresponding amplification factor. Select the appropriate resistors according to the required gain to satisfy the \(V_{\text{out}}\) calculation formula.

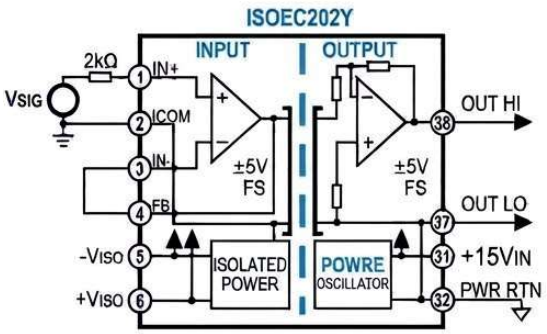

Fig. 4 Typical ISOEC202Y application with gain of 1 (G=1)

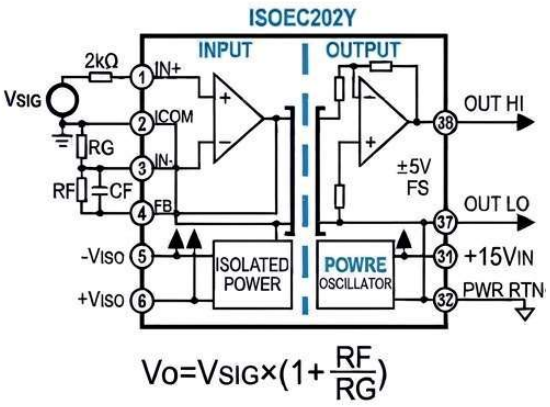

Fig. 5 Typical ISOEC202Y application with gain greater than 1 (G>1)

Figure 6 shows the basic gain configuration of the ISOEC 202N. The input amplifier gain is set to G = 1, meaning that when the input signal is ±5 V, the output signal is also ±5 V. No amplification is applied to the input signal, and the device provides signal isolation with a basic 1:1 input-to-output ratio. Figure 7 illustrates the gain configuration of the ISOEC 202N when the input signal is relatively small and amplification is required (G > 1). In this case, external gain-setting feedback resistors should be connected as shown in the diagram to amplify the input signal. To ensure accuracy, high-precision metal film resistors with a temperature coefficient of 25 ppm/°C are recommended. The resistor values can be calculated based on the desired output voltage and corresponding amplification factor. Select the appropriate resistors according to the required gain to satisfy the \(V_{\text{out}}\) calculation formula.

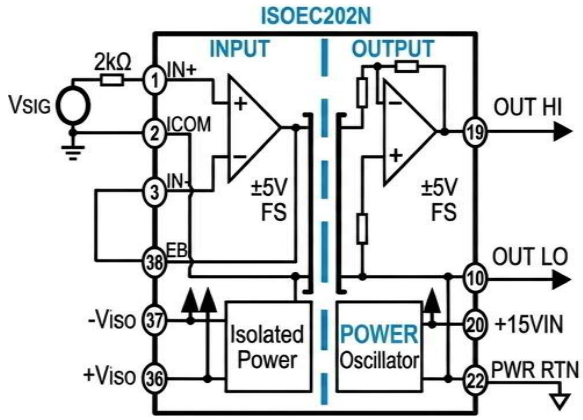

Fig. 6 Typical ISOEC202N application with gain of 1 (G=1)

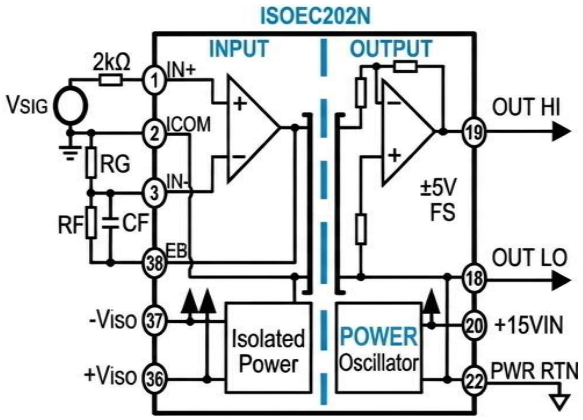

$$Vo = V_{SIG} \times (1 + \frac{RF}{RG})$$

Fig. 7 Typical ISOEC202N application with gain greater than 1 (G>1)

Figures 8 and 9 show the inverting amplification configurations for the ISOEC 202Y and ISOEC 202N, respectively. When input signal inversion is required, with a gain of G = 1 or G > 1, configure the external gain-setting feedback resistors as shown in the diagrams to achieve inverting amplification of the input signal. To ensure accuracy, high-precision metal film resistors with a temperature coefficient of 25 ppm/°C are recommended. The resistor values can be calculated based on the desired output voltage and corresponding amplification factor. Select the appropriate resistors according to the required gain to satisfy the \(V_{\text{out}}\) calculation formula.

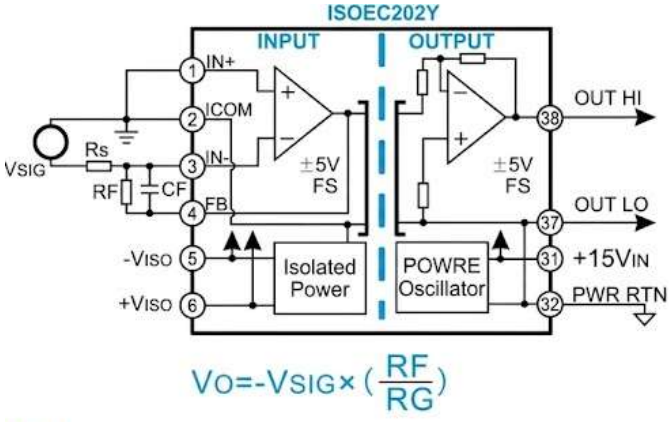

$$Vo = -V_{SIG} \times (\frac{RF}{RG})$$

Fig. 8 Typical Application of ISOEC202Y in Signal Inverting Phase Mode

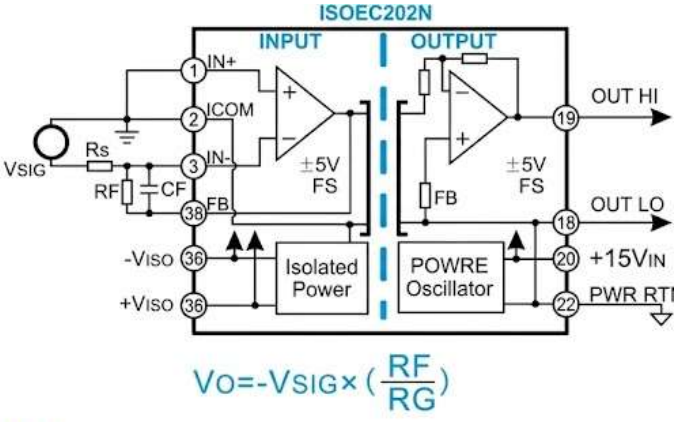

$$Vo = -V_{SIG} \times (\frac{RF}{RG})$$

Fig. 9 Typical Application of ISOEC202N in Signal Inverting Phase Mode

Figure 10 shows the basic gain configuration of the ISOEC 202S. The input amplifier gain is set to G = 1, meaning that when the input signal is ±5 V, the output signal is also ±5 V. No amplification is applied to the input signal, and the device provides signal isolation with a basic 1:1 input-to-output ratio. Figure 11 illustrates the gain configuration of the ISOEC 202S when the input signal is relatively small and amplification is required (G > 1). In this case, external gain-setting feedback resistors should be connected as shown in the diagram to amplify the input signal. To ensure accuracy, high-precision metal film resistors with a temperature coefficient of 25 ppm/°C are recommended. The resistor values can be calculated based on the desired output voltage and corresponding amplification factor. Select the appropriate resistors according to the required gain to satisfy the \(V_{\text{out}}\) calculation formula.

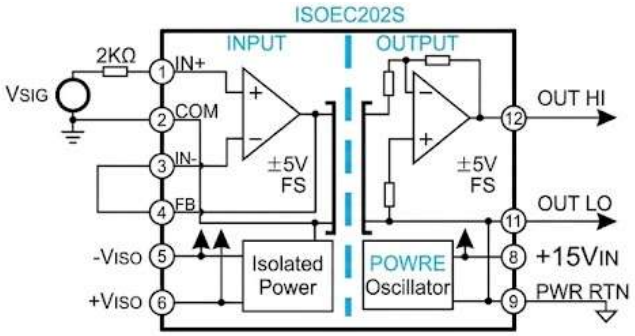

Fig. 10 Typical application of ISOEC202S with gain of 1 (G=1)

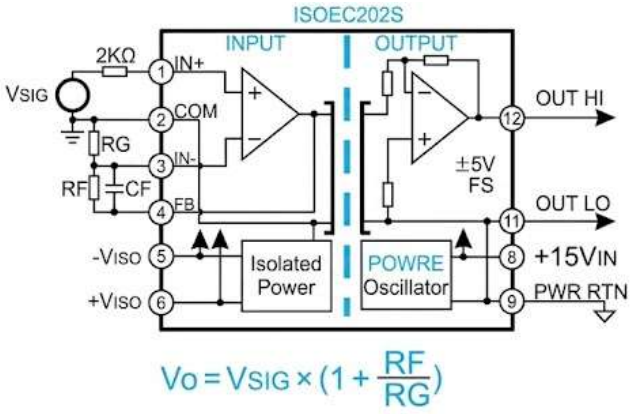

Fig. 11 Typical application of ISOEC202S with gain greater than 1 (G>1

Recommended Circuits for Power Supply Filtering and EMC Solutions

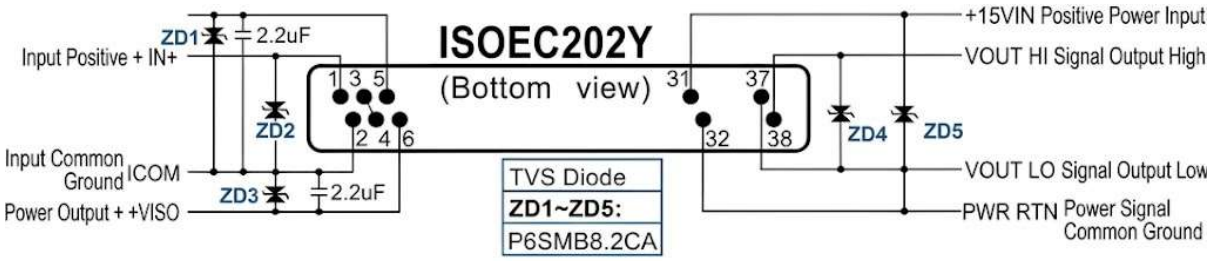

ISOEC202Y Product Peripheral Protection Circuit Scheme

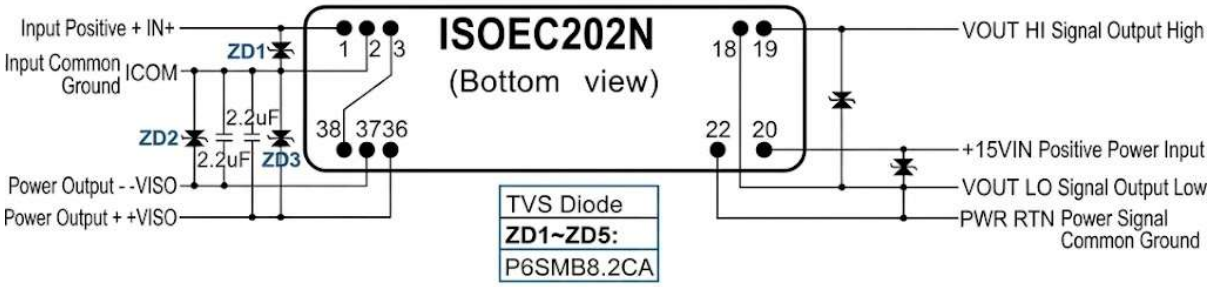

ISOEC202N Product Peripheral Protection Circuit Scheme

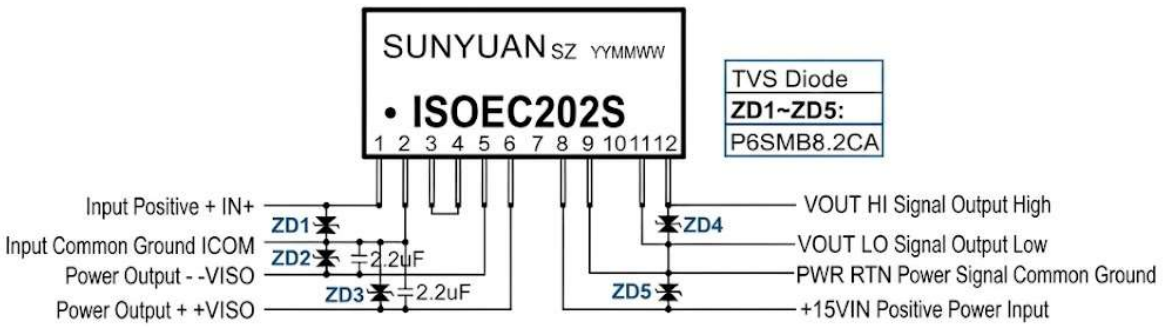

ISOEC202S Product Peripheral Protection Circuit Scheme

High-Voltage Isolation Safety Testing Methods

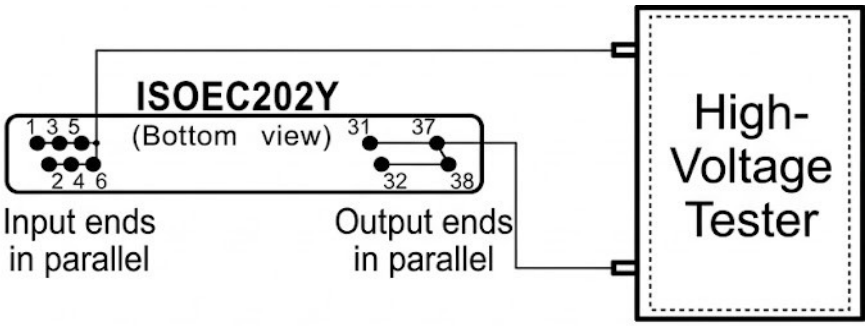

ISOEC202Y Input-Output Isolation Voltage Endurance Testing Method

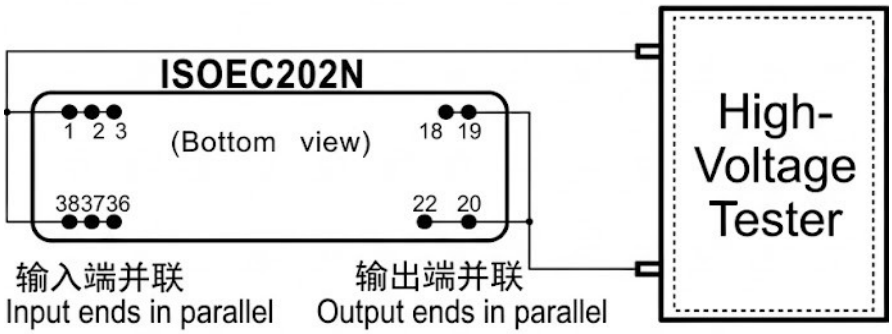

ISOEC202N Input-Output Isolation Voltage Endurance Testing Method

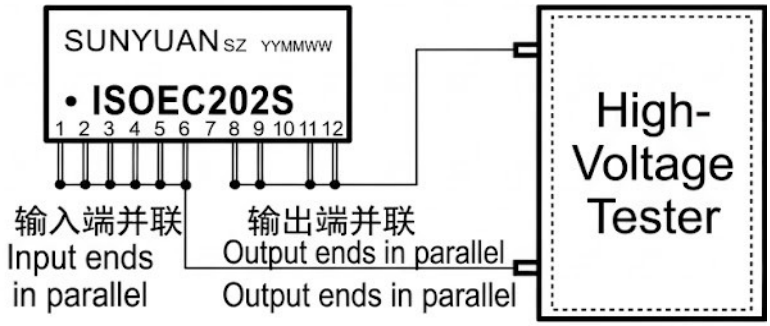

ISOEC202S Input-Output Isolation Voltage Endurance Testing Method

High-Voltage Isolation Safety Test Procedures and Precautions

1. Connect the wiring as shown in the diagram above and set the rated test voltage on the hipot tester according to the product's isolation voltage specifications. Ensure personal safety during testing and take precautions against electric shock!

Test environment: Ambient temperature TA = 25°C; relative humidity < 75%.

2. Operators performing high-voltage tests must wear rubber insulating gloves, and an insulating rubber mat must be placed on the floor to prevent electric shock.

3. The enclosure of the hipot tester must be reliably grounded. Do not perform tests in environments with high temperatures, high humidity, or excessive dust.

4. Before connecting the hipot tester to the device under test (DUT), ensure that the high-voltage output is set to "0" and the test function key is in the "RESET" position. Do not touch any other objects during this operation.

5. Do not touch the device under test, test leads, or high-voltage output terminals while the tester is in high-voltage test mode or before high-voltage discharge is complete.

6. The product's dielectric withstand voltage test should be performed as shown in the diagram above. Short the input pins together and the output pins together, respectively, then apply the rated test voltage for 1 minute.

7. Set the test voltage according to the product's rated isolation voltage. In manual mode, gradually increase the tester's output voltage from 0 V to the rated value and maintain it for 1 minute.

8. Insulation voltage testing is inherently a potentially destructive test that may damage the insulation of a device. Therefore, high-voltage testing should be performed as infrequently as possible on the same product. If repeated testing and certification are required for different customers, the following procedure is generally recommended: for the first test of a product batch, apply the rated test voltage specified in the product datasheet. For each subsequent test, reduce the test voltage to 70% of the rated value and minimize the number of high-voltage tests accordingly. Otherwise, repeated high-voltage testing may cause irreversible damage to the product.