AD215-Compatible High-Precision Wide-Bandwidth Analog Signal Isolation Amplifier

ISOEC 215 Series – 120 kHz Ultra-High Bandwidth Analog Signal Isolation Amplifier

Product Features

●120 kHz (-3 dB) Wide Bandwidth, Pin-to-Pin Compatible with AD215
●Two Package Options Available: Standard SIP12 and PCB Adapter, Compatible with AD215
●Accuracy Class: 0.05, 0.1; Nonlinearity < 0.025% over the Full Scale Range
●2500 Vrms Galvanic Isolation Between Signal Input and Output
● Power Supply: ±15 VDC
●Built-in Isolated Power Supply for Extended Isolated Power Distribution: ±15 V / ±10 mA
●High Slew Rate: 6 V/μs; Fast Settling Time: 9 μs
●Low Harmonic Distortion: -80 dB at 1 kHz
●Industrial-Grade Wide Operating Temperature Range: -40°C to +85°C

Typical Applications

●Provides convenient power supply for signal acquisition circuits such as preamplifiers and bridge circuits
●Analog signal ground-loop interference suppression, loop isolation, and signal acquisition
● Stepper motor operation control
●High-speed data acquisition systems for sensor voltage signals
●Analog bidirectional voltage signal waveform recording instruments
●Multi-channel bidirectional voltage signal input isolation for PLC/DCS systems
●Signal conditioning for vibration analysis and strain measurement applications
● Power line and transient voltage signal monitoring
●Circuit-by-circuit isolation and interference suppression at the input of multi-channel data acquisition systems

Overview

SunYuan ISOEC 215 is a high-speed input isolation amplifier designed for the isolation and amplification of ultra-wideband analog signals. It adopts a high- and low-voltage isolation capacitive differential transmission architecture, replacing electromagnetic-field coupling with capacitive electric-field coupling.This design eliminates magnetic saturation, hysteresis distortion, and electromagnetic radiation interference, enabling reliable isolation and amplification of high-frequency analog signals across a wide frequency range from DC to 120 kHz. While providing excellent wideband dynamic performance, the ISOEC 215 also maintains key DC performance characteristics.Designed with both flexibility and ease of use in mind, the ISOEC 215 is well suited for applications requiring high-speed analog signal measurement under high common-mode voltage (CMV) conditions.

The ISOEC 215 Series supports an input and output voltage range of ±10 V, with a flexible gain setting range of 1 to 10 V/V. It features a flexible input stage and buffered output stage. An independent operational amplifier is integrated at the input, providing input buffering, signal amplification, and signal conditioning. The buffered output stage can drive low-impedance loads. An output voltage adjustment pin is also provided to eliminate output offset.The ISOEC 215 provides complete electrical isolation between the input and output while incorporating an isolated power supply available for external use. The device offers a highly integrated solution and requires only ±15 V DC power from the output side. Its built-in isolated DC-DC converter eliminates the need for an additional external isolated DC-DC converter, helping designers reduce

external circuitry, overall system complexity, and component costs.The isolated input side also provides a regulated ±15 V DC auxiliary power supply (up to ±10 mA) for powering isolated-side external amplifiers and signal-conditioning circuits. This auxiliary power can also be used to directly provide excitation power for sensors or transmitters in field applications.

The ISOEC 215 Series is available in three package and installation options to meet different field installation requirements: 1.ISOEC 215 – Features a PCB adapter design with a pin-to-pin compatible footprint with the widely used AD215 package, making it easy to replace existing AD215-based designs.； 2.ISOEC 215S – Uses a compact, cost-effective standard SIP12-pin package with a flame-retardant housing, providing a space-saving solution for PCB applications.； 3.DIN ISOEC 215 – Features a DIN-rail mounting and terminal wiring design, suitable for convenient installation in industrial control cabinets and field applications. All three versions offer identical electrical performance. They provide 2500 Vrms high-voltage electrical isolation between input and output, harmonic distortion ≤ -80 dB at 1 kHz, overall nonlinearity ≤ 0.025%, slew rate ≥ 6 V/μs, and settling time ≤ 9 μs. All three package options combine high precision, wide bandwidth, high-frequency response, strong resistance to magnetic interference, and a compact form factor, making them well suited for demanding analog signal isolation applications involving specialized sensors and transmitters. The ISOEC 215 Series effectively addresses common challenges of magnetically coupled isolation circuits in complex industrial electromagnetic environments, including susceptibility to magnetic-field interference, low-frequency signal distortion, and bulky circuit designs. It can be widely applied to high-precision, wide-bandwidth analog signal isolation and acquisition in power monitoring, industrial automation, rail transit, precision instrumentation, and other applications.

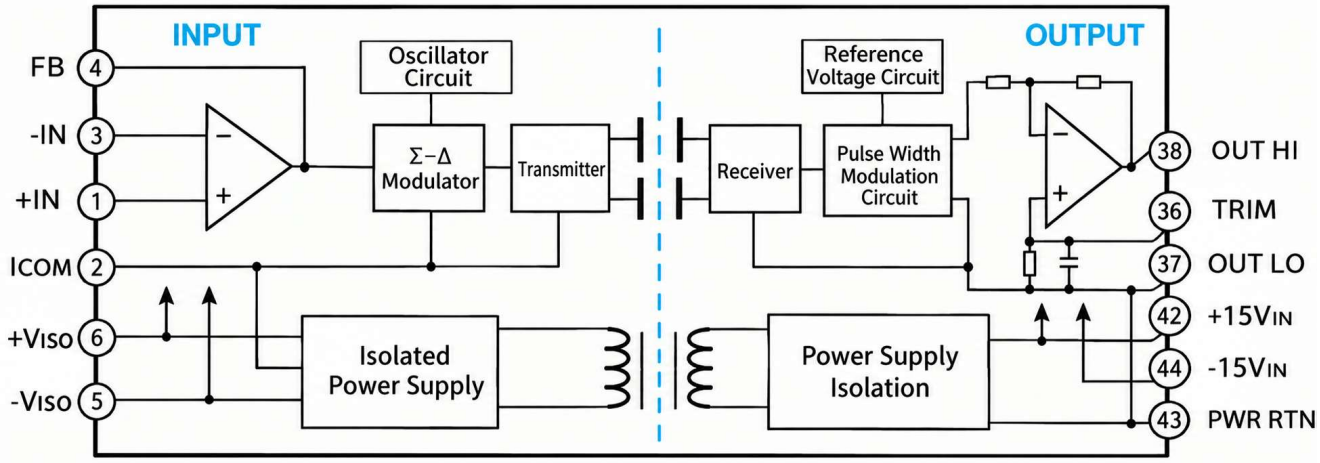

Figure 1 Block Diagram of ISOEC215

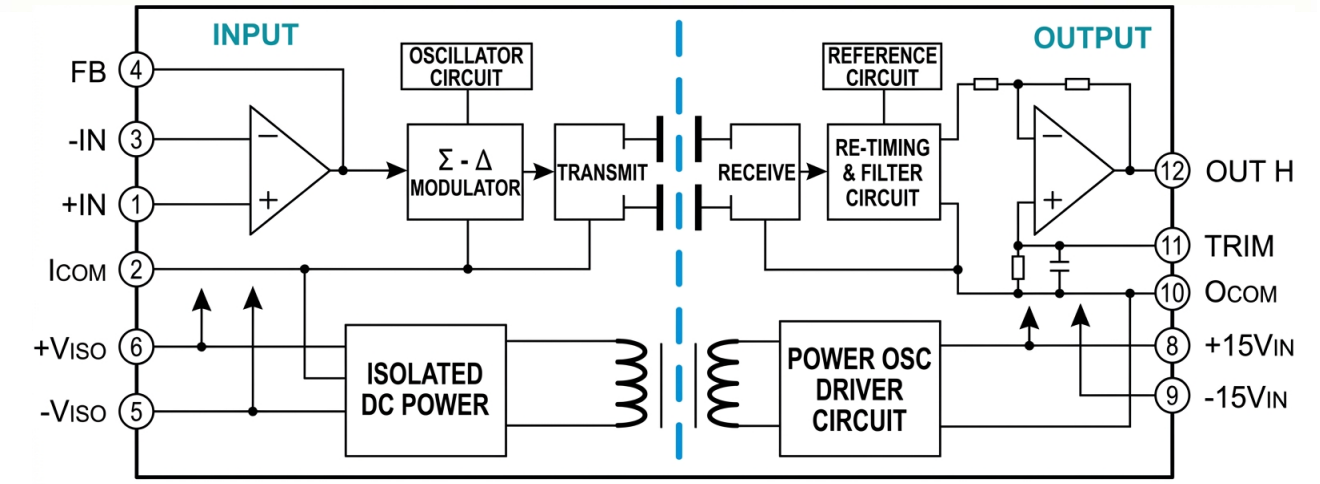

Fig. 2 ISOEC215S Schematic Block Diagram

Technical Specifications (Test Conditions: 25°C, Power Supply ±15 V, Output Load 2 kΩ, unless otherwise noted)

Parameter Name		Test Conditions	Minimum	Typical	Maximum	Unit
Isolation Voltage		AC,60Hz,1m		2500		Vrms
Gain			1		10	V/V
Gain Error				2		mV/V
Gain Temperature Drift				50		ppm/°C
Nonlinearity				±0.005	±0.025	%FSR
Signal Input		Voltage	-10		10	V
Input Offset Voltage				±0.2	±3	mV
Input Impedance				10^12		Ω
Power Distribution Output	Voltage			±15		V
	Current			±10		mA
	Ripple			±50		mV
	Accuracy			±2		%
Signal Output		Voltage	-10		10	V
Load Capacity		Vout=±10V		2		kΩ
Full Signal Bandwidth		-3dB	100	120		KHz
Propagation Delay				2.2		uS
Rise Time		10%~90%,±		3		uS
Common-Mode Rejection					105	dB
Signal Output Ripple		No filtering		5	20	mVRMS
Signal Voltage Temperature Drift				0.1	0.5	mV/°C
Auxiliary Power	Voltage	User-defined	±14.25	±15	±16.5	VDC
	Current	Full load		+60/-20		mA
Operating Temperature			-40		85	°C
Storage Temperature			-45		105	°C

(Note: Ripple and noise in the power supply directly affect the accuracy of the signal output. Please use a low-ripple, low-noise power supply to power the module.)

Maximum Rated Value (Long-term operation at the maximum rated value will affect the product's service life; exceeding this value may result in irreparable damage.)

Continuous Isolation Voltage （Maximum Continuous Isolation Voltage Between Input and Output Terminals	2500Vrms
PWR（Maximum Input Range for Auxiliary Power Supply Voltage）	±18VDC
Lead Temperature （Maximum soldering temperature and duration for pins: <10 seconds）	+300°C
Output Voltage Load Min（Minimum Load When Outputting a Voltage Signal）	2KΩ

Selection Guide

Model number	Packaging	Selection Recommendations
ISOEC 215	PCB Adapter Compatible with AD215 (DIP-44-Pin)	Pin-to-Pin Compatible with AD215 for PCB Mounting
ISOEC 215S	SIP-12-Pin, Compact Size	For use in the user's new PCB redesign
DIN ISOEC 215D	Standard DIN 35 Rail Installation	No PCB soldering required; mounts on control cabinet rails

Dimensions and PCB Layout Reference Dimensions

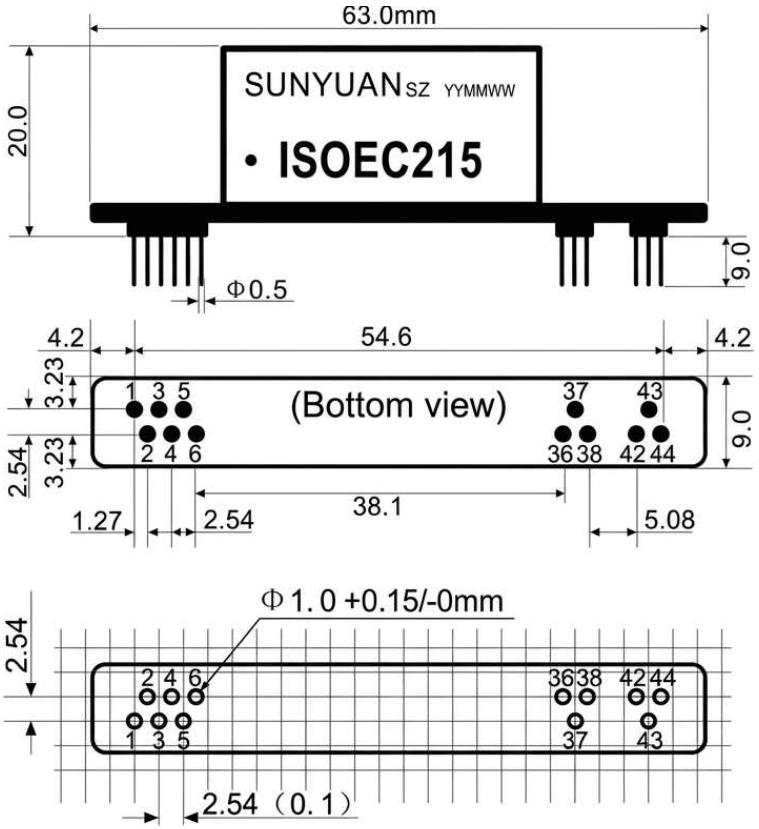

ISOEC215 PCB Layout Reference

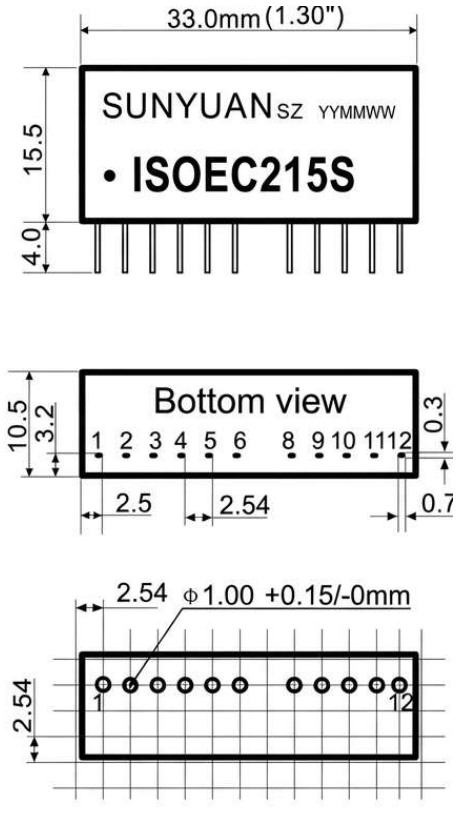

ISOEC215S PCB Layout Reference

DIN ISOEC 215D Guide Rail Product Dimensions

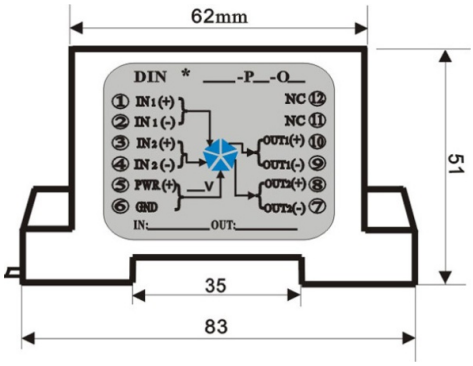



ISOEC 215 Pin Function Description

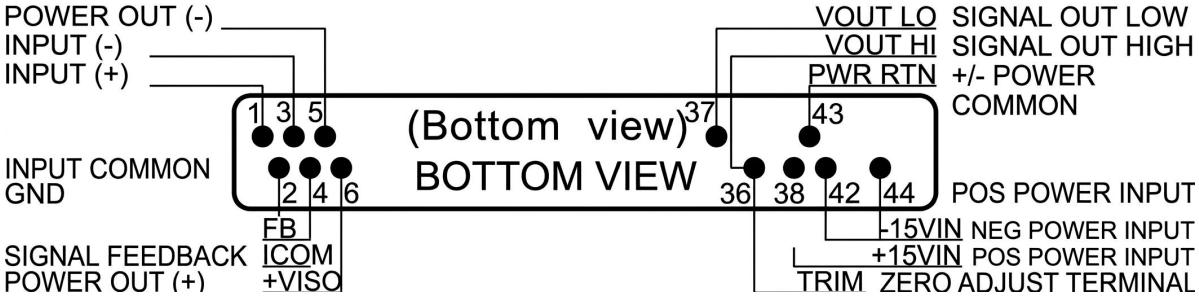

No.	Symbol	Function	No.	Symbol	Function
1	IN+	Signal Input (Positive)	36	TRIM	Output Zero Point Adjustment Terminal
2	ICOM	Signal Input (Common Ground)	37	VOUT LO	Low Signal Output (Ground)
3	IN-	Signal Input (Negative)	38	VOUT HI	High Signal Output (Positive)
4	FB	Signal Feedback	42	+15VIN	+15V Positive Power Supply Input Terminal
5	VISO-	Isolated Power Supply: -15V Negative Voltage Output	43	PWR RTN	Common Ground for Positive and Negative Power Supplies
6	VISO+	Isolated Power Supply: +15V Positive Voltage Output	44	-15VIN	-15V Negative Power Supply Input Terminal

ISOEC 215S Pin Function Description

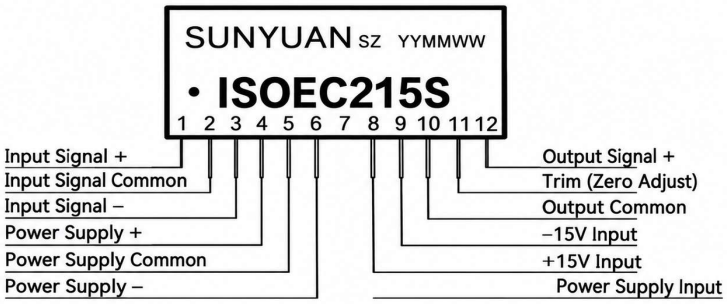



No.	Symbol	Function	No.	Symbol	Function
1	IN+	Signal Input (Positive)	7	NC	Unused Pin
2	ICOM	Signal Input (Common	8	+15VIN	+15V Positive Power Supply

		Ground)			Input
3	IN-	Signal Input (Negative)	9	-15VIN	-15V Negative Power Supply Input
4	FB	Signal Feedback	10	OCOM	Signal and Power Common Ground
5	VISO-	Isolated Power Supply: -15V Negative Voltage Output	11	TRIM	Output Zero Adjustment
6	VISO+	Isolated Power Supply: +15V Positive Voltage Output	12	VOUT HI	Signal Output Positive (+)

DIN ISOEC 215D Pin Function Description for Rail-Mounted Signal Isolators

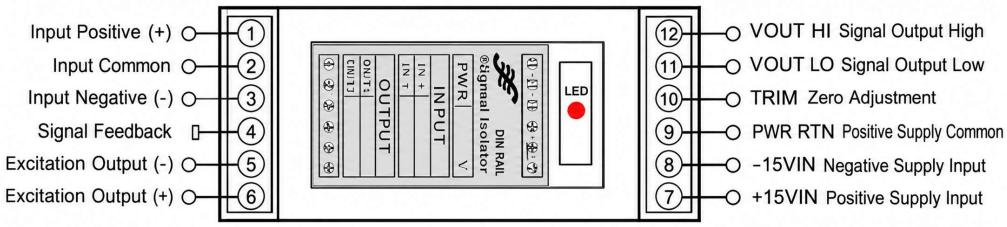

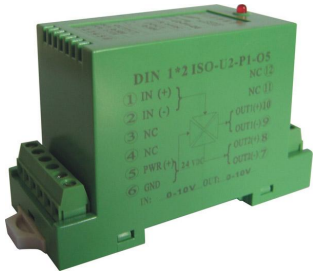

No.	Symbol	Function	No.	Symbol	Function
1	IN+	Positive Signal Input Terminal	7	+15VIN	+15V Positive Power Supply Input Terminal
2	ICOM	Signal Input Common Ground	8	-15VIN	-15V Negative Power Input Terminal
3	IN-	Negative Signal Input	9	PWR RTN	Common Ground for Positive and Negative Power Supplies
4	FB	Signal Feedback Terminal	10	TRIM	Output Zero Point Adjustment Terminal
5	VISO-	Isolated Power Distribution— 15V Negative Voltage Output	11	VOUT LO	Low signal output (ground)
6	VISO+	Isolated Power Distribution + 15V Positive Voltage Output	12	VOUT HI	High signal output (positive terminal)

Typical Applications

Figures 3 and 4 illustrate the basic gain configurations of the ISOEC215 and ISOEC215S, respectively. By setting the input amplifier gain to G = 1, an input signal of ±10 V produces an output signal of ±10 V, without any amplification of the input signal. This configuration essentially achieves 1:1 signal transmission

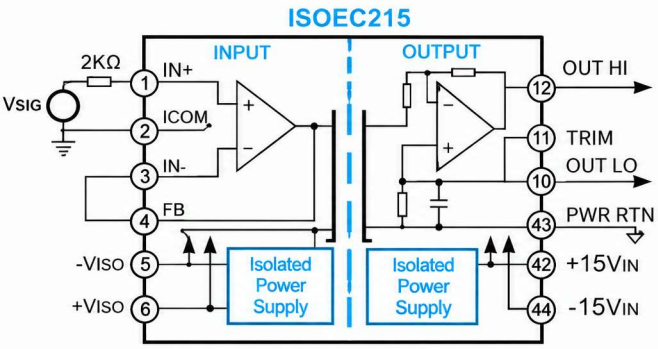

Figure 3 Basic Gain Configuration of ISOEC215 (G=1)

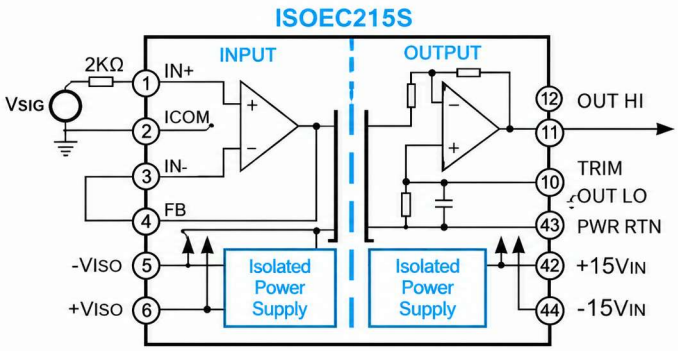

Figure 4 Basic Gain Configuration of ISOEC215S (G=1)

while providing electrical isolation.

Figures 5 and 6 illustrate the gain configurations for the ISOEC215 and ISOEC215S, respectively, when the input signal is relatively small and requires amplification (G > 1). Configure the external gain-feedback resistors as shown in the diagrams to amplify the input signal. To ensure high accuracy, high-precision metal film resistors with a temperature coefficient of 25 ppm/°C are recommended. The resistor values can be calculated based on the desired output voltage and the required gain. Select the appropriate resistor values according to the gain, ensuring that the output voltage satisfies the \(V_{\text{out}}\) calculation formula.

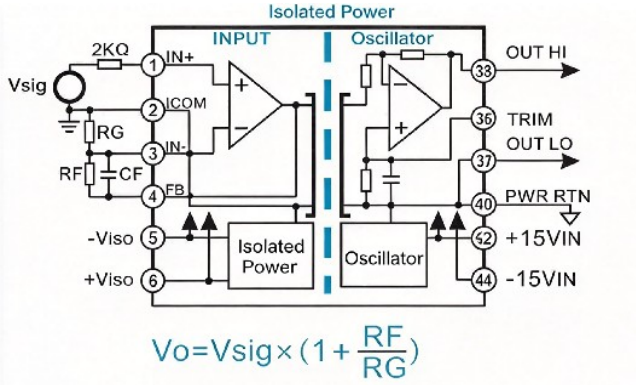

Figure 5 ISOEC215 Typical Application with Gain(G > 1)

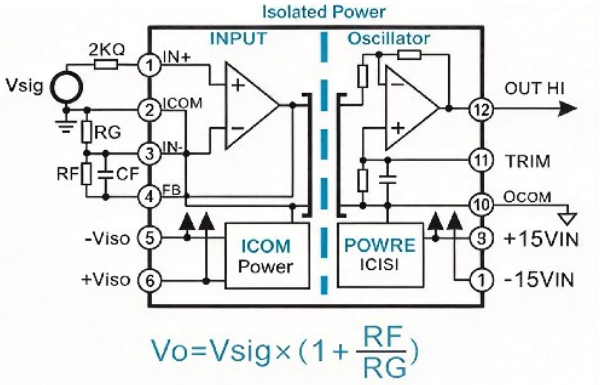

Figure 6 ISOEC215S Typical Application with Gain(G >1)

Figures 7 and 8 illustrate the inverting amplification configurations for the ISOEC 215 and ISOEC 215S, respectively. When the input signal needs to be inverted and amplified (G = 1 or G > 1), configure the external gain-setting feedback resistors as shown in the corresponding figure to achieve the desired inverting amplification. To ensure accuracy, high-precision metal film resistors with a temperature coefficient of 25 ppm/°C are recommended. The resistor values can be calculated based on the desired output voltage and the required gain. Select the appropriate resistor values according to the calculated gain to ensure that the \(V_{out}\) formula is satisfied.

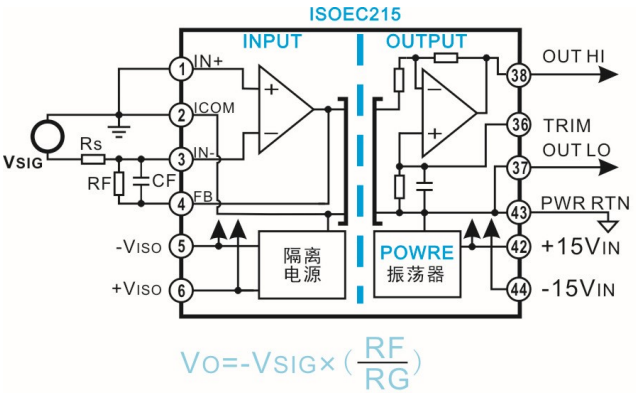

图7 ISOEC215信号反相模式典型应用

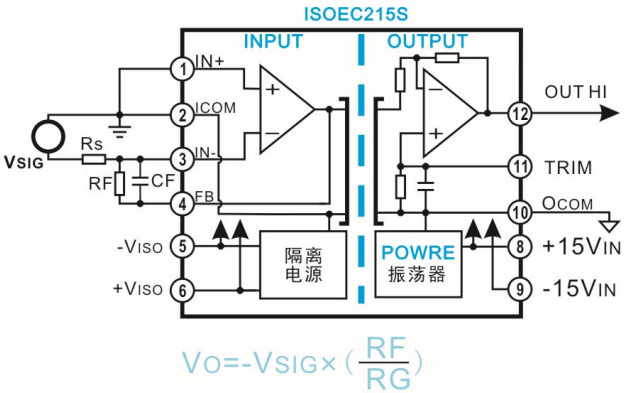

图8 ISOEC215S信号反相模式典型应用

Figures 9 and 10 illustrate the basic zero-adjustment configurations for the ISOEC 215 and ISOEC 215S, respectively. The zero point of each product is calibrated internally before shipment, so users generally do not need to perform additional zero-point calibration. If zero adjustment is not required, the TRIM pin can be left unconnected.If zero-point offset adjustment is required, configure the circuit as shown in the figures below. To adjust the zero point in the positive direction, connect point A to +15 V. To adjust the zero point in the negative direction, connect point A to -15 V. Then, adjust the potentiometer Rb to achieve the desired zero-point offset correction.

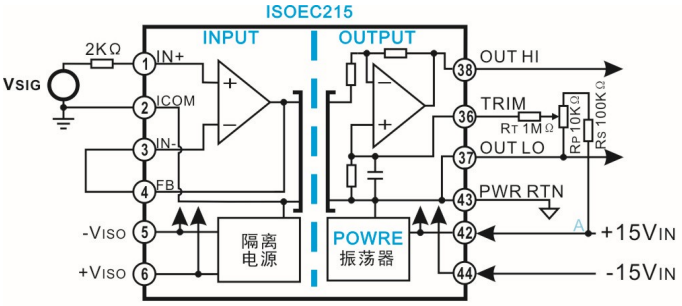

图9 ISOEC215输出零点调节典型应用电路

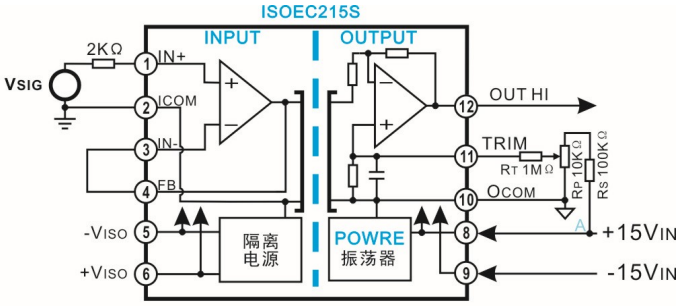

图10 ISOEC215S输出零点调节典型应用电路

The ISOEC 215 and ISOEC 215S require dual positive and negative power supplies and provide electrical isolation only between the input and output. If users require single-supply operation or three-way isolation among the input, output, and power supply, an external isolated DC-DC converter that converts a single power supply into dual positive and negative power supplies can be used to power the product (e.g., the VA1515S-2W isolated power module).Figures 11 and 12 illustrate typical application circuits for the ISOEC 215 and ISOEC 215S, respectively, using a single power supply to achieve three-way isolation among the input, output, and power supply.

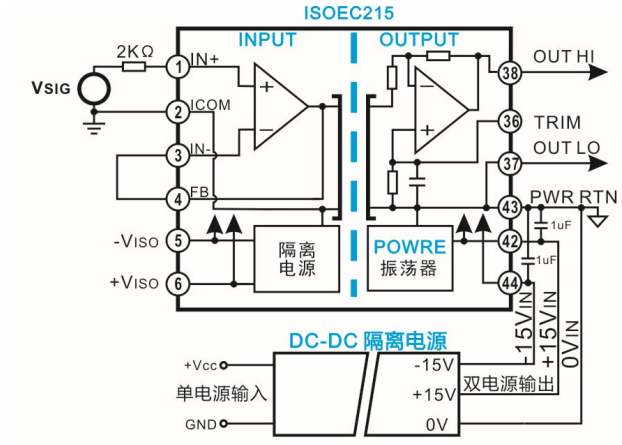

图11 ISOEC215单电源供电三端隔离典型应用

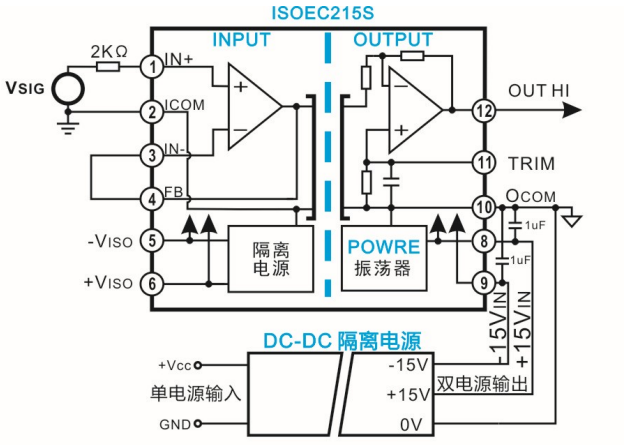

图12 ISOEC215S单电源供电三端隔离典型应用

Recommended External Protection Circuits for Power Supply Filtering and EMC Solutions

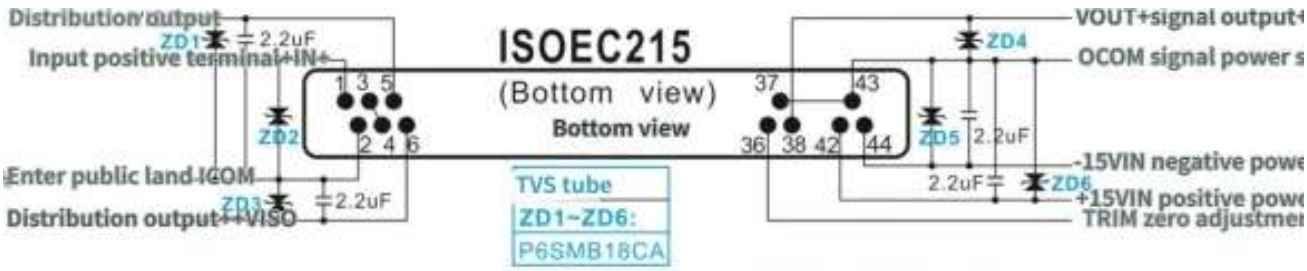

ISOEC215 Product Peripheral Protection Circuit Solution

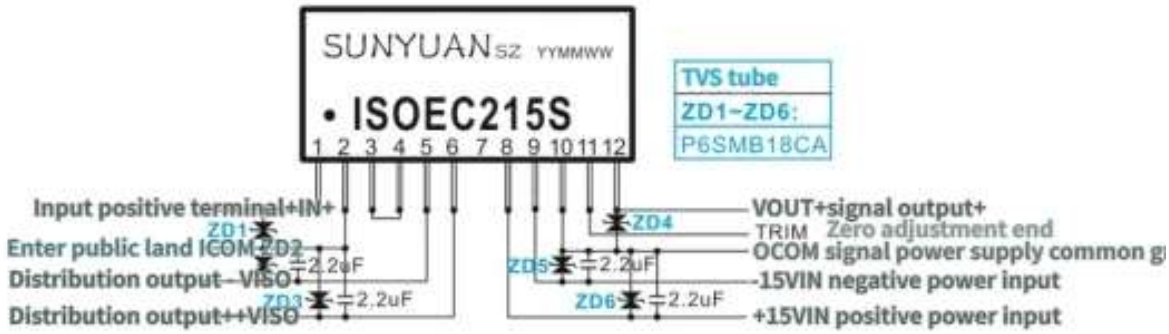

ISOEC215S Product Peripheral Protection Circuit Solution

High-Voltage Isolation Safety Test Method

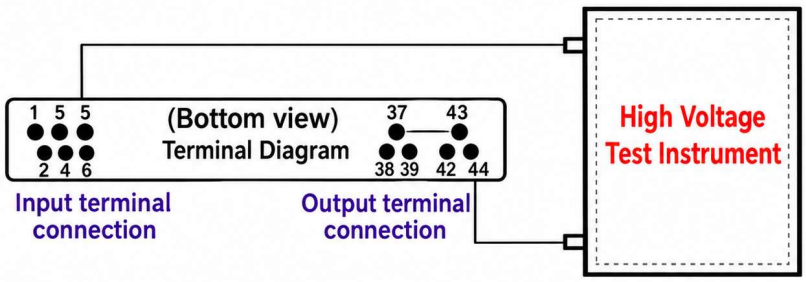

ISOEC215 Input and Output Terminal Isolation
Withstand Voltage Test Method

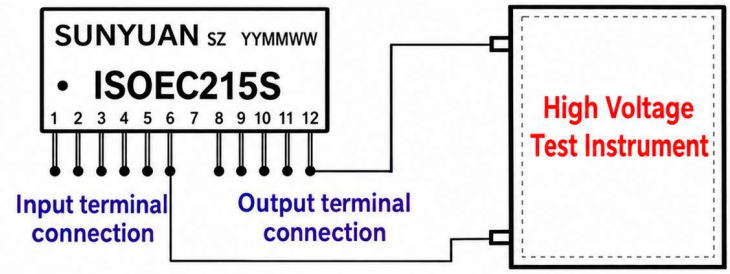

ISOEC215S Input and Output Terminal Isolation
Withstand Voltage Test Method

High-Voltage Isolation Safety Testing Methods and Precautions

1. Connect the wiring as shown in the figure above, and set the rated test voltage of the hipot tester according to the product's specified isolation voltage. Ensure personal safety during testing and take precautions against electric shock!

Test Conditions: Ambient temperature \(T_A = 25^\circ\text{C}\); relative humidity < 75%.

2. Operators performing high-voltage tests must wear rubber insulating gloves, and a rubber insulating mat must be placed on the floor to prevent electric shock.

3. The enclosure of the high-voltage tester must be reliably grounded. Do not perform tests in environments with high temperatures, high humidity, or excessive dust.

4. When connecting the device under test to the high-voltage tester, ensure that the high-voltage output is set to “0” and the test function key is in the “RESET” state. Do not touch any other objects during this process.

5. While the tester is in high-voltage test mode and until the high-voltage discharge is complete, do not touch the device under test, test leads, or high-voltage output terminals.

6. The product’s isolation withstand voltage test shall be performed as shown in the figure above. Short-circuit the input terminals together and the output terminals together, respectively, then apply the rated test voltage for 1 minute.

7. According to the product’s rated isolation voltage, use the manual mode to gradually increase the tester’s output voltage from 0 V to the rated value, then maintain the rated voltage for 1 minute.

8. Insulation voltage testing is inherently a destructive test that places stress on the insulation system. Therefore, high-voltage testing of the same product should be minimized. If repeated testing and certification are required by different customers, the following procedure is generally recommended: perform the first test on a batch of products at the rated voltage specified in the datasheet. For each subsequent test, reduce the test voltage to 70% of the rated value and minimize the number of high-voltage tests accordingly. Otherwise, repeated high-voltage testing may cause irreversible damage to the product.